Current part is item (9) on diagram. Available at www.oshkoshequipment.com

(1) SMR Code	(2) Federal Stock Number	(3) DESCRIPTION		(4) UNIT of meas	(5) Qty inc. in Unit	(6) 30-day DS maint allowance			(7) 30-day GS maint allowance			(8) 1-yr alw per 100 equip cnt-gcy	(9) Depot maint alw per 100 equip	(10) Illustration	
		Reference Number & Mfr. Code	Usable On Code			(a) 35084	(b) 21-50	(c) 51-100	(a) 35084	(b) 21-50	(c) 51-100			(a) Figure No.	(b) Item No.
		3307-SPECIAL PURPOSE KITS-CONTINUED													
	5310-959-7600	2-NUT,SELF-LOCKING MS51922-5 (96906)												N/I	
	5940-113-9826	2-TERMINAL MS25036-114 (96906)												N/I	
	5970-433-9294	2-INSULATOR 7056633 (19207)												N/I	
		2-WASHER 138485 (21450)												N/I	
		1-TAPE,INSULATING,ELECTRICAL 875855 (21450)												N/I	
		GROUP 47-GAGES (NON-ELECTRICAL)													
		4701-INSTRUMENTS (SPEED AND DISTANCE)													
P-O	6680-882-0966	SHAFT ASSEMBLY,FLEXIBLE: TACHOMETER DRIVE (WITH CASING AND CORE) MS51071-4 (96906)	A	EA	1	*	*	*	*	*	*	4	5	309	1
P-O	5305-068-0500	SCREW,CAP,HEXAGON: CLAMP PLATE MS90725-3 (96906)	A	EA	1	*	*	*	*	*	*	6	10	309	2
X2-O		PLATE: CLAMP MOUNTING 10883224 (19207)	A	EA	1	*	*	*	*	*	*			309	3
P-O	5340-282-7537	CLAMP,LOOP: TACHOMETER SHAFT MS21333-41 (96906)	A	EA	1	*	*	*	*	*	*	6	10	309	4
P-O	5325-720-9054	GROMMET: TACHOMETER AND SPEEDOMETER SHAFT MS35490-20 (96906)	A	EA	2	*	*	*	*	*	*	6	20	309	5
P-O	6680-294-6481	CORE,FLEXIBLE SHAFT: TACHOMETER 1581351 (70040)	A	EA	1	*	*	*	*	*	*	6	10	309	6
P-O	6680-753-9689	GASKET: SPEEDOMETER END 1568362 (70040)	A	EA	1	*	*	*	*	*	*	8	10	309	7
P-O	6680-825-2076	TACHOMETER,MECHANICAL: INSTRUMENT CLUSTER MS35916-2 (96906)	A	EA	1	*	*	*	*	*	*	4	10	309	8
P-O	6680-933-3599	SPEEDOMETER,MECHANICAL: MS39021-2 (96906)	A	EA	1	*	*	*	*	*	*	6	10	309	9
P-O	5305-269-2803	SCREW,CAP,HEXAGON: SPEEDOMETER SHAFT CLAMP MS90726-60 (96906)	A	EA	1	*	*	*	*	*	*	6	10	309	10
P-O	6680-740-9701	SHAFT ASSEMBLY,FLEXIBLE: SPEEDOMETER DRIVE (WITH CASING AND CORE) 7409701 (19207)	A	EA	1	*	*	*	*	*	*	6	10	309	11
P-O	6680-528-8736	CORE,FLEXIBLE SHAFT: 1581430 (70040)	A	EA	1	*	*	*	*	*	*	6	10	309	12

Current part is item (9) on diagram. Available at www.oshkoshequipment.com

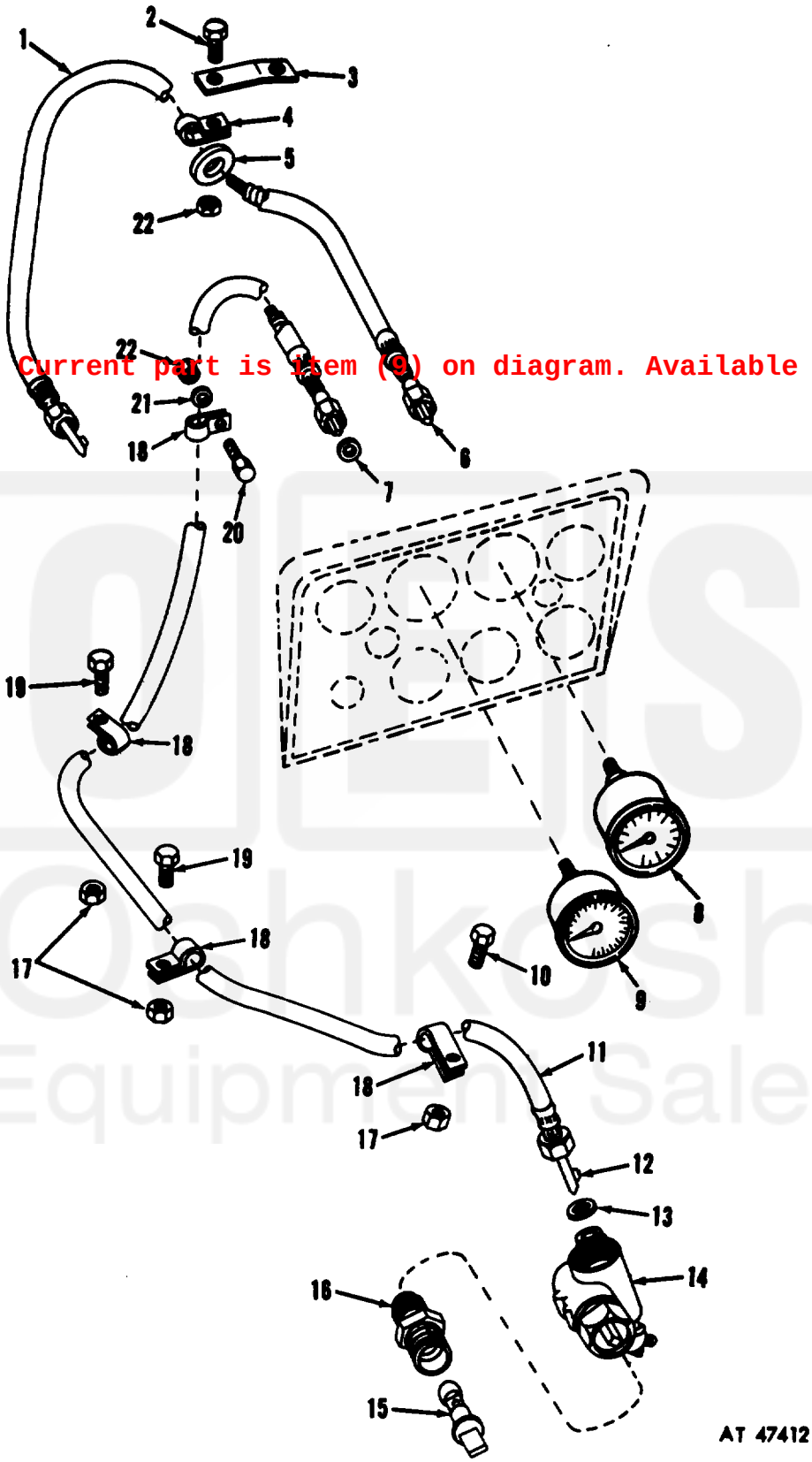

Current part is item (9) on diagram. Available at www.oshkoshequipm

Figure 309. Speedometer and tachometer shafts and *related parts.*

Current part is item (9) on diagram. Available at www.oshkoshequipm